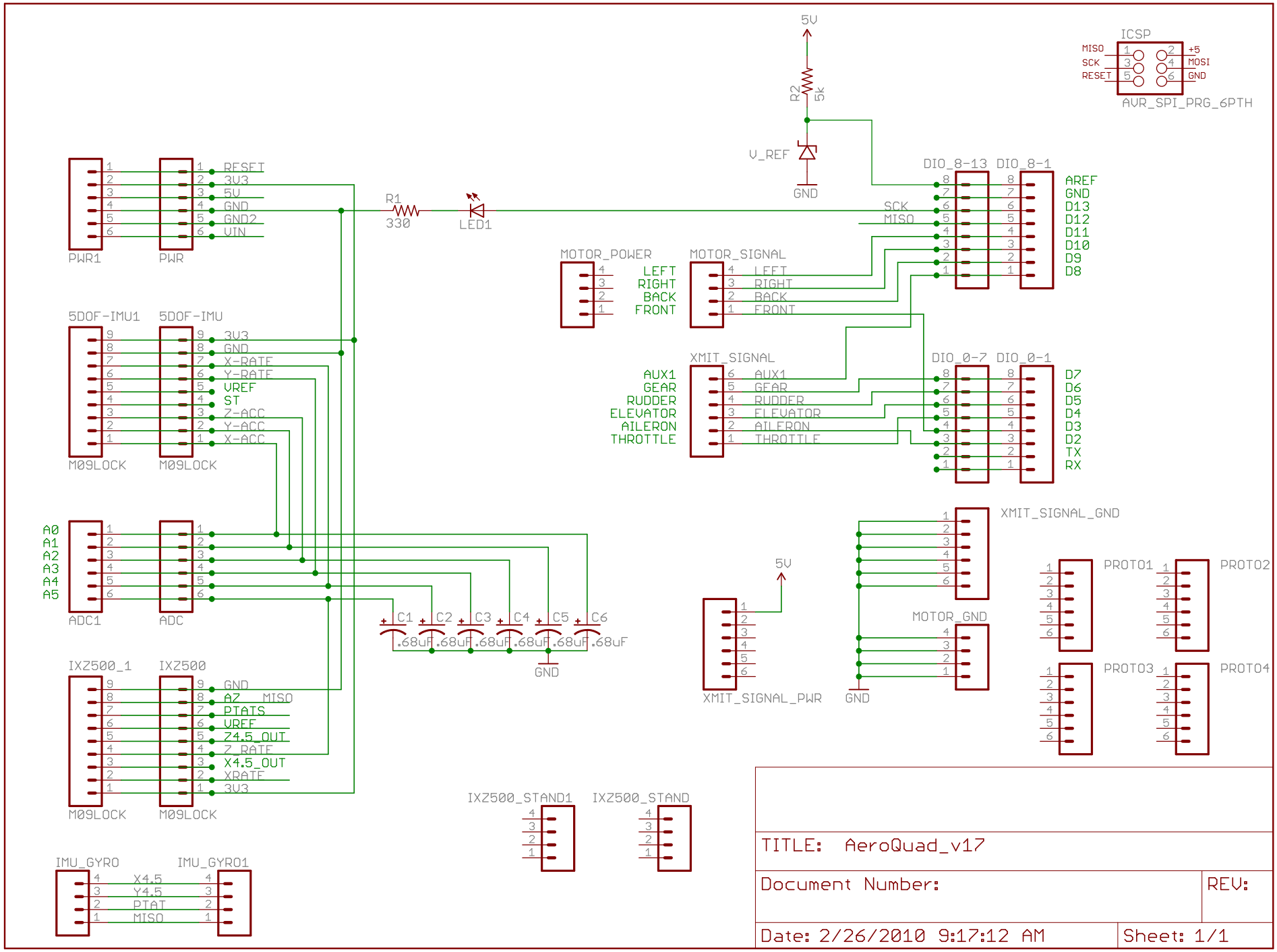
5V
R2
5k
V_REF
GND
ICSP
MISO
SCK
RESET
+5
MOSI
GND
AVR_SPI_PRG_6PTH
PWR1
PWR
RESET
3V3
5V
GND
GND2
VIN
R1
330
LED1
DIO_8-13
DIO_8-1
AREF
GND
D13
D12
D11
D10
D9
D8
SCK
MISO
MOTOR_POWER
LEFT
RIGHT
BACK
FRONT
MOTOR_SIGNAL
5DOF-IMU1
5DOF-IMU
3V3
GND
X-RATE
Y-RATE
VREF
ST
Z-ACC
Y-ACC
X-ACC
M09LOCK
XMIT_SIGNAL
AUX1
GEAR
RUDDER
ELEVATOR
AILERON
THROTTLE
DIO_0-7
DIO_0-1
D7
D6
D5
D4
D3
D2
TX
RX
A0
A1
A2
A3
A4
A5
ADC1
ADC
C1
C2
C3
C4
C5
C6
.68uF
XMIT_SIGNAL_GND
XMIT_SIGNAL_PWR
MOTOR_GND
PROTO1
PROTO2
PROTO3
PROTO4
IXZ500_1
IXZ500
AZ
MISO
PTATS
VREF
Z4.5_OUT
Z_RATE
X4.5_OUT
XRATE
IXZ500_STAND1
IXZ500_STAND
IMU_GYRO
IMU_GYRO1
X4.5
Y4.5
PTAT
MISO
TITLE: AeroQuad_v17
Document Number:
REV:
Date: 2/26/2010 9:17:12 AM
Sheet: 1/1